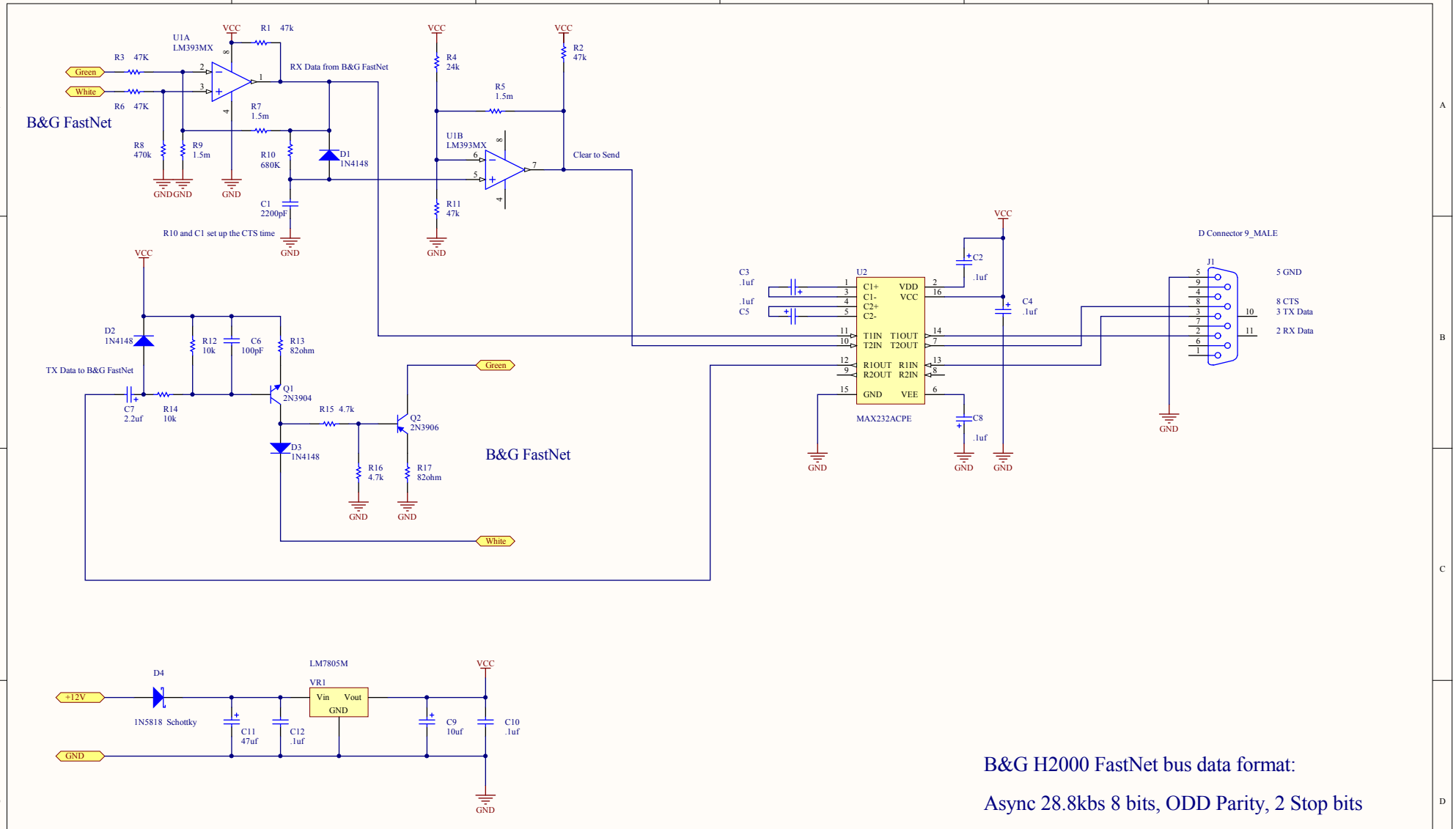

B&G H2000 FastNet bus data format:

Async 28.8kbs 8 bits, ODD Parity, 2 Stop bits

Title	*B&G2000 Fasnet Interface, RS232*		*lafleur@lafleur.us* *Lafleur Designs*
Size: B	Number: N2K-122009	Revision: 1a	
Date: 12/30/2009	Time: 5:18:11 PM	Sheet 1 of 1	
File: C:\Altium Projects\B&G Interface\B&G FastNet.SchDoc			